Stromzähler-Modul (X-10)

(C) Fingers elektrische Welt 2006

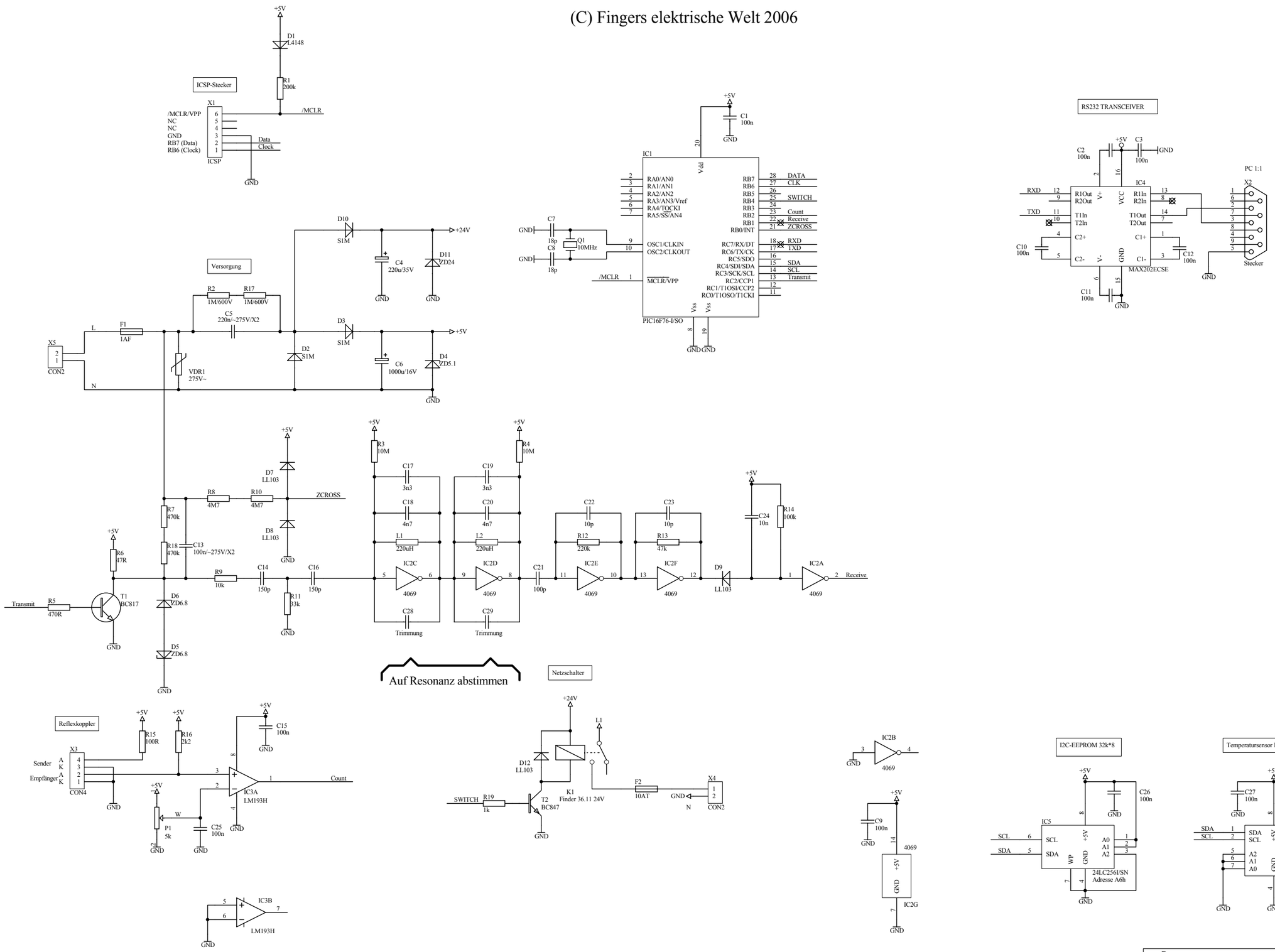

Title: ***Stromsensor***			*Fingers elektrische Welt*
Size: A2	Number:	Revision:	
Date: 20-Jan-2006	Time: 20:52:28	Sheet1 of 1	
File: F:\x10\Universalsensor.ddb - Stromzähler\Stromzähler.sch			

Protel
Making Electronic Design Easy