Universal-CPU-Modul

(C) Fingers elektrische Welt 2005

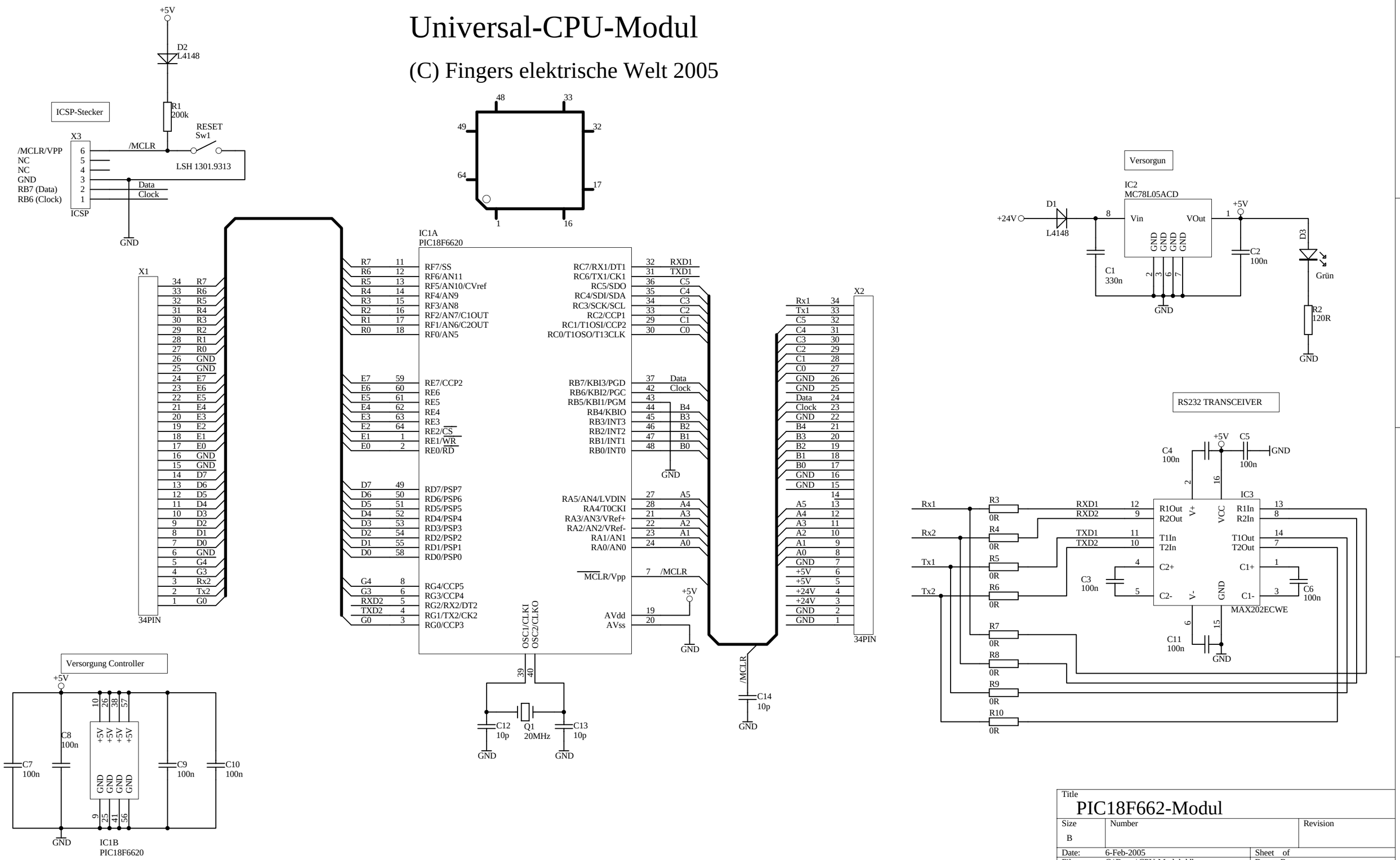

Title		
PIC18F662-Modul		
Size: B	Number	Revision
Date: 6-Feb-2005	Sheet of	
File: C:\Daten\CPU-Modul.ddb	Drawn By:	