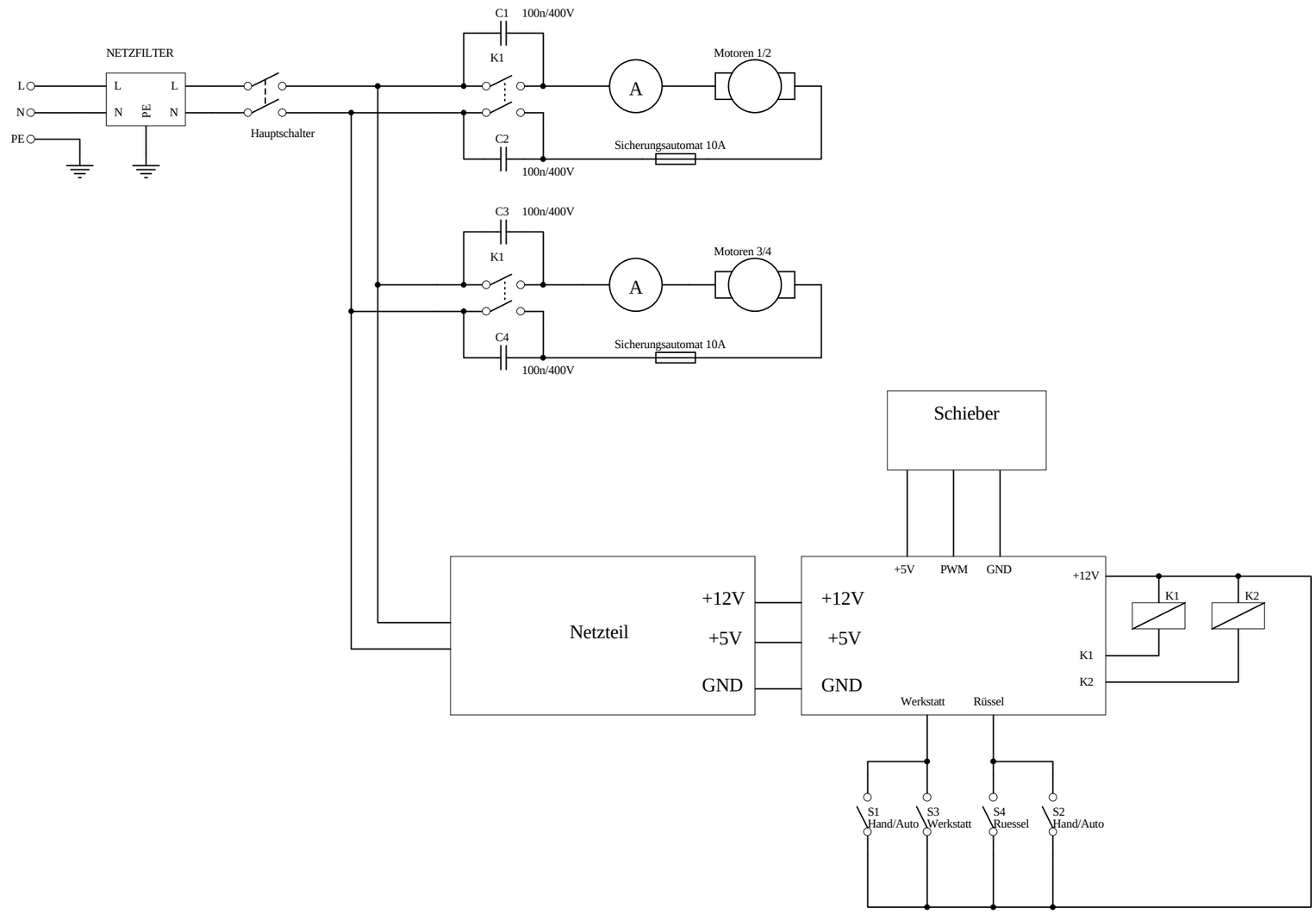

Title *Schaltplan Sauger*			*Fingers elektrische Welt*
Size: A3	Number:	Revision:	
Date: 26-Apr-2007 Time: 08:52:13		Sheet 1 of 1	
File: I:\sauger\Hardware\Zentralsauger.Ddb - Documents\Schaltplan.sch			

Protel
Making Electronic Design Easy®